KORTEK

EHWA®

Automotive

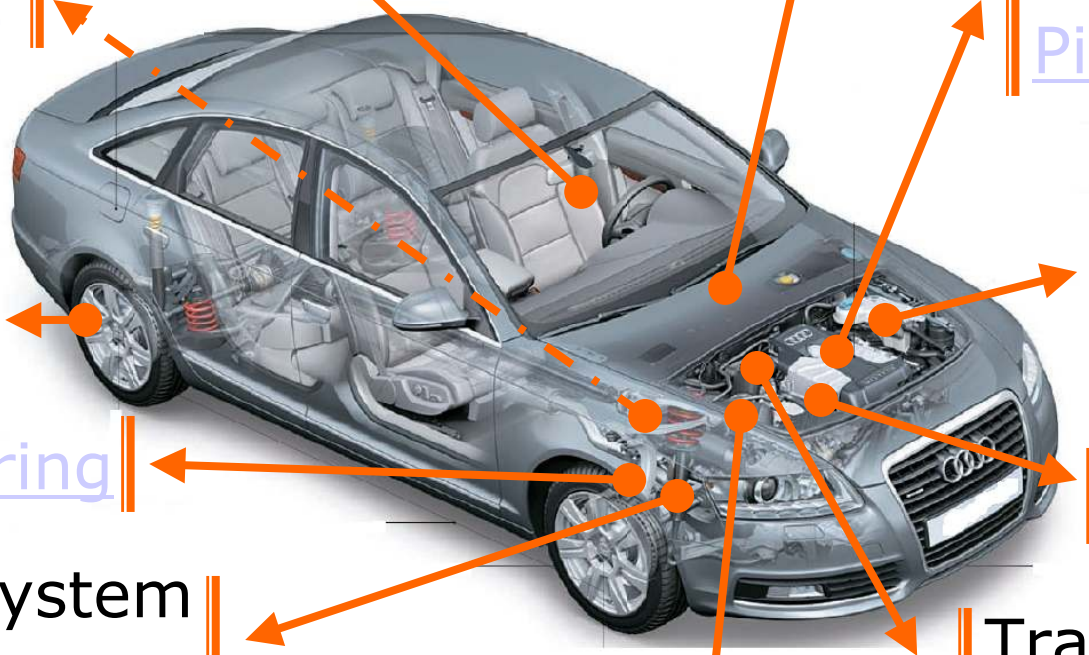

Automotive
- Cylinder Head

Cylinder Head
_ Mold Excess Cutting

WORK PIECE		TOOL FIGURE	
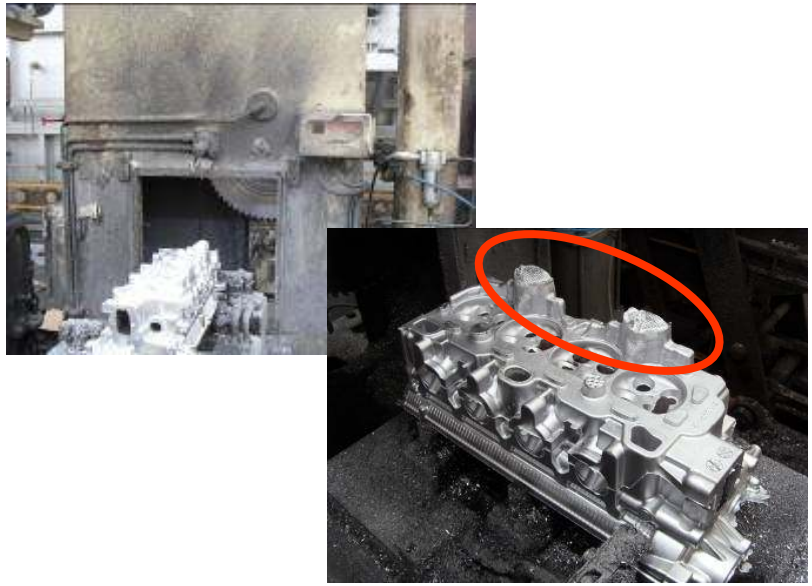			
Type of Part	Mold Excess	Feed Rate (mm/rev)	
Work piece Material	AL alloy	Tool life	10,000 unit
Spindle speed	1,440 rpm	Coolant	Dry
Cutting speed(m/min)		Etc	500D-6.5T-36Z-90H
Depth of cut (mm)		Tool material	PCD

Cylinder Head
_ Top Face Finish Milling

WORK PIECE		TOOL FIGURE	
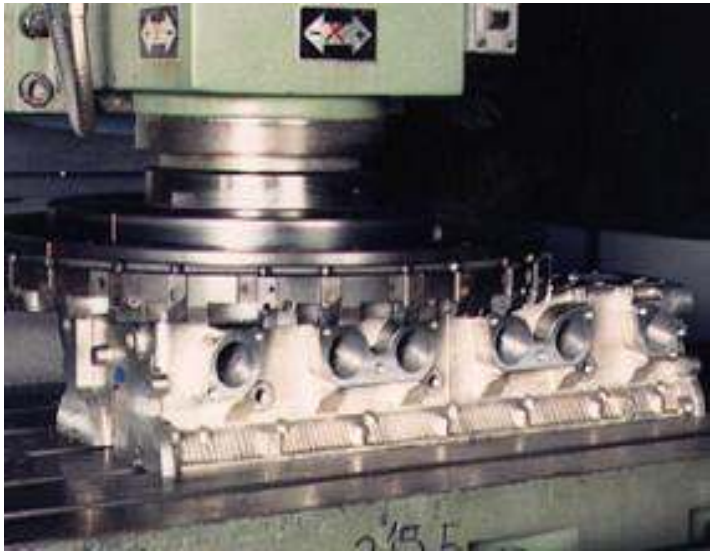		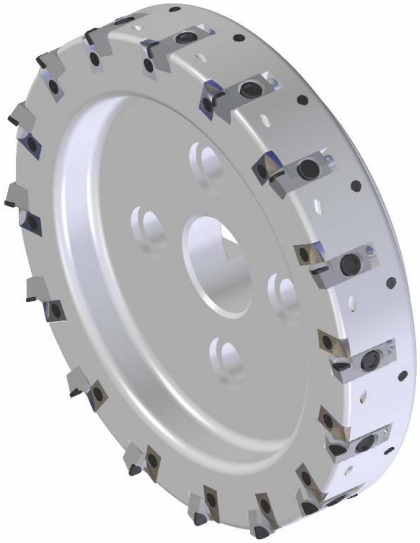	
Type of Part	Cylinder Head	Feed Rate (mm/rev)	1.8
Work piece Material	AL alloy	Tool life	6,000 unit
Spindle speed	3,500 rpm	Coolant	Wet
Cutting speed(m/min)	2,747.5	Etc	Al- Cutter, 250D
Depth of cut (mm)	0.5	Tool material	PCD

Cylinder Head
_ Cam Bore Rough

WORK PIECE		TOOL FIGURE	
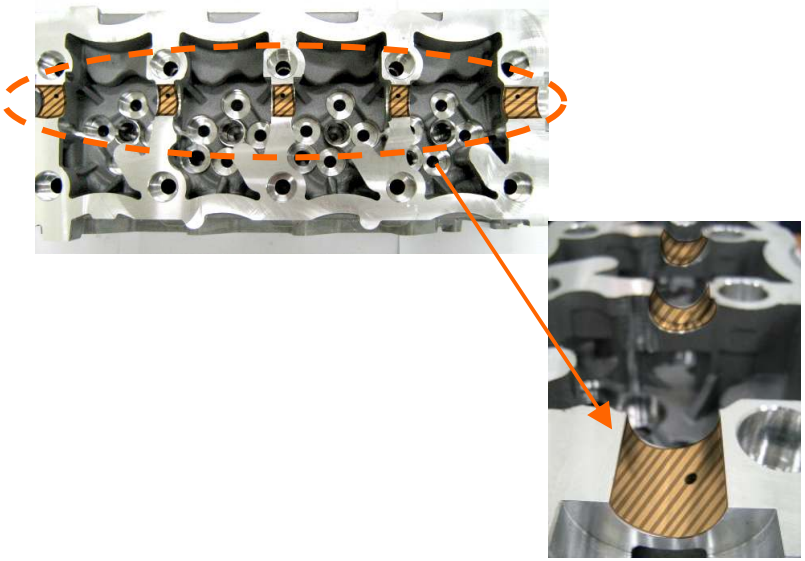			
Type of Part	Cylinder Head	Feed Rate (mm/rev)	0.128
Work piece Material	AL alloy	Tool life	10,000 unit
Spindle speed	7,200 rpm	Coolant	Wet
Cutting speed(m/min)	610.4	Etc	
Depth of cut (mm)		Tool material	PCD

Cylinder Head
_ Head Bolt Hole Drilling

WORK PIECE		TOOL FIGURE	
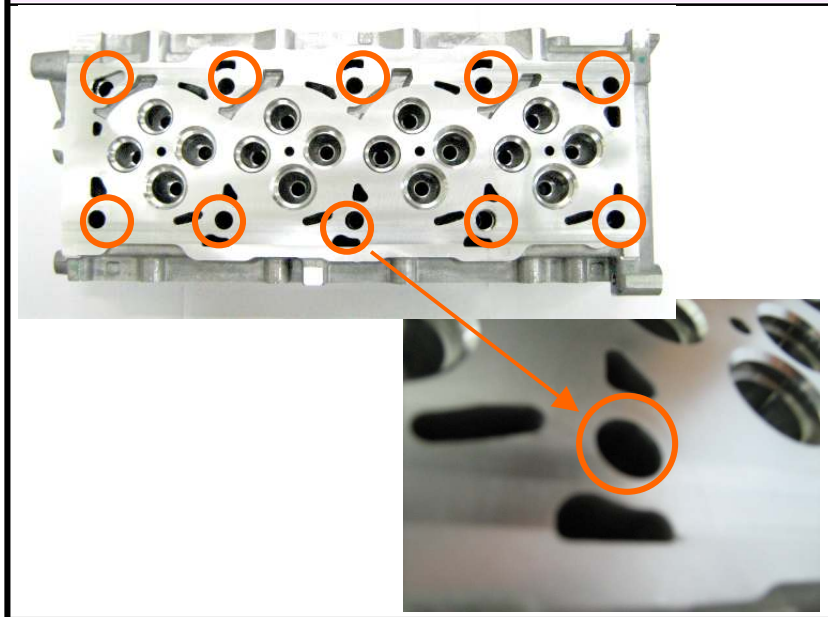		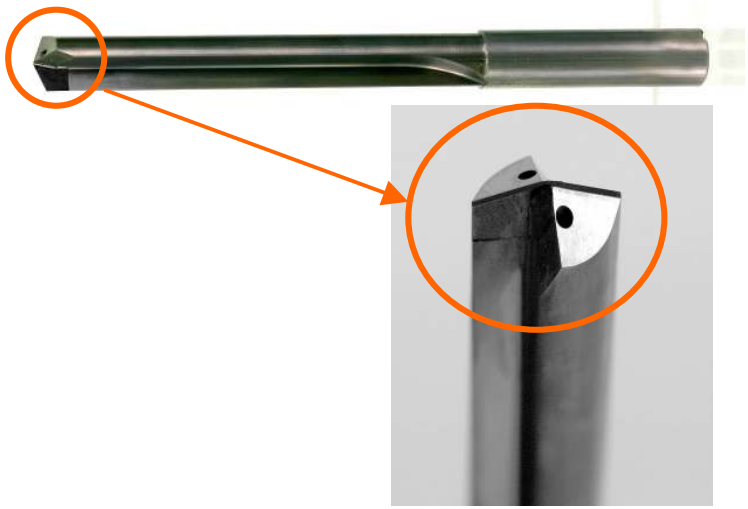	
Type of Part	Cylinder Head	Feed Rate (mm/rev)	0.1
Work piece Material	AL alloy	Tool life	100,000 Hole
Spindle speed	9,000 rpm	Coolant	Wet
Cutting speed(m/min)	367	Etc	
Depth of cut (mm)		Tool material	PCD

Cylinder Head
_ Cam Bore Slot Cutting

WORK PIECE		TOOL FIGURE	
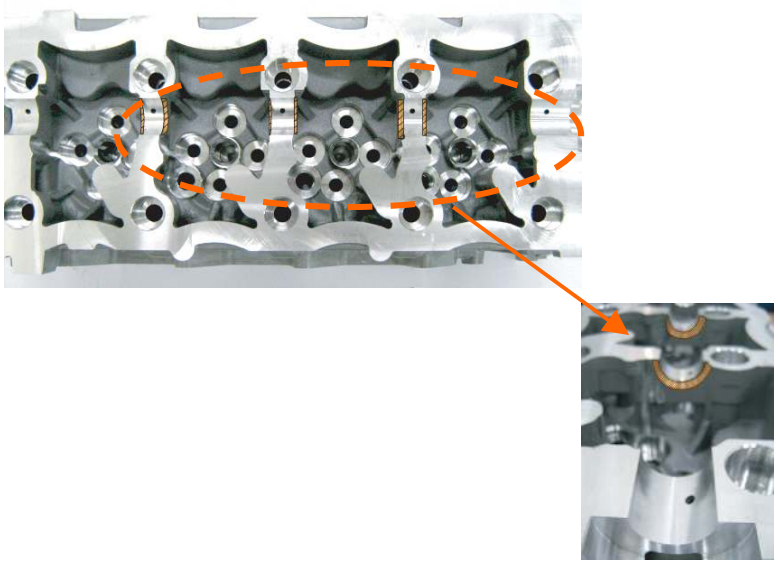			
Type of Part	Cylinder Head	Feed Rate (mm/rev)	0.03
Work piece Material	AL alloy	Tool life	25,000 unit
Spindle speed	6,500 rpm	Coolant	Wet
Cutting speed(m/min)	775.58	Etc	34D-4Z-10T-18H
Depth of cut (mm)		Tool material	PCD

Cylinder Head
_ Bottom Face Milling

WORK PIECE		TOOL FIGURE	
		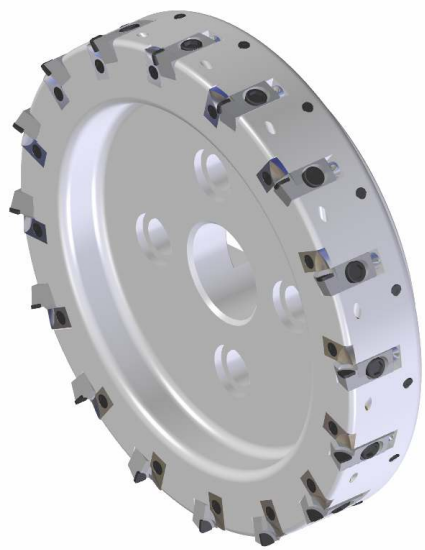	
Type of Part	Cylinder Head	Feed Rate (mm/rev)	1.8
Work piece Material	AL alloy	Tool life	6,000 unit
Spindle speed	3,500 rpm	Coolant	Wet
Cutting speed(m/min)	2,747.5	Etc	Al-Cutter, 250D-15NT
Depth of cut (mm)	0.5	Tool material	PCD

Cylinder Head
_ Front, Rear Face Milling

WORK PIECE		TOOL FIGURE	
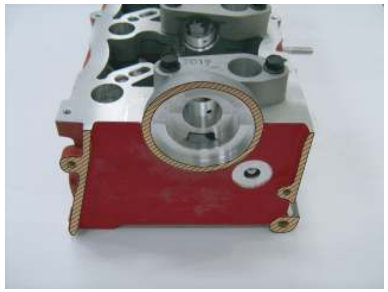			
Type of Part	Cylinder Head	Feed Rate (mm/rev)	0.36
Work piece Material	AL alloy	Tool life	5,000 unit
Spindle speed	10,000 rpm	Coolant	Wet
Cutting speed(m/min)	1,978.2	Etc	Al- Cutter , 63D-3NT
Depth of cut (mm)		Tool material	PCD

Cylinder Head
_ Manifold Rough Milling

WORK PIECE		TOOL FIGURE	
Type of Part	Cylinder Head	Feed Rate (mm/rev)	1.3
Work piece Material	AL alloy	Tool life	10,000 unit
Spindle speed	10,000 rpm	Coolant	Wet
Cutting speed(m/min)	3,141	Etc	Mono Tool, 100D-13NT
Depth of cut (mm)	0.5	Tool material	PCD

Cylinder Head
_ Manifold Finish Milling

WORK PIECE		TOOL FIGURE	
Type of Part	Cylinder Head	Feed Rate (mm/rev)	0.7
Work piece Material	AL alloy	Tool life	5,500 unit
Spindle speed	7,500 rpm	Coolant	Wet
Cutting speed(m/min)	2,355	Etc	Al- Cutter , 100D-7NT
Depth of cut (mm)	0.5	Tool material	PCD

Cylinder Head
_ Valve Seat Port

WORK PIECE		TOOL FIGURE	
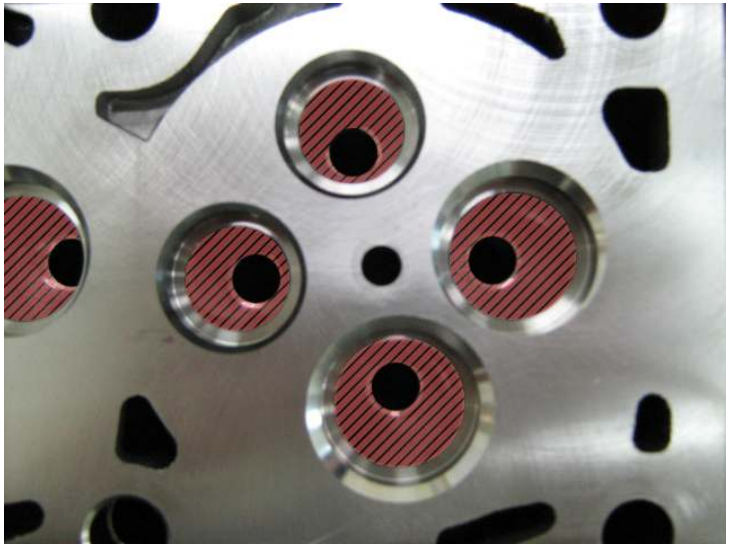			
Type of Part	Cylinder Head	Feed Rate (mm/rev)	0.25
Work piece Material	AL alloy	Tool life	
Spindle speed	5,000 rpm	Coolant	Wet
Feed speed(m/min)	1,250	Etc	
Depth of cut (mm)	0.2	Tool material	PCD

Cylinder Head
_ Head Bolt Hole Contour Milling

WORK PIECE		TOOL FIGURE	
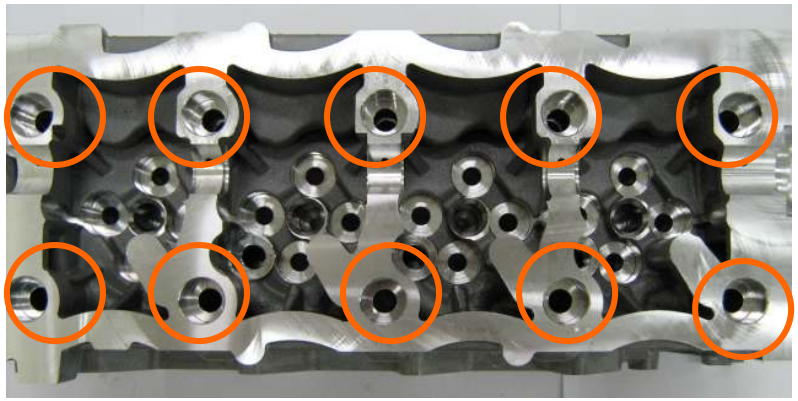			
Type of Part	Cylinder Head	Feed Rate (mm/rev)	0.12
Work piece Material	AL alloy	Tool life	4,000 unit
Spindle speed	8,000 rpm	Coolant	Wet
Cutting speed(m/min)	314	Etc	12.5D-5.7T-163L-32Y
Depth of cut (mm)		Tool material	PCD

Cylinder Head

_ Valve Seat/Guide Hole Reaming

WORK PIECE		TOOL FIGURE	
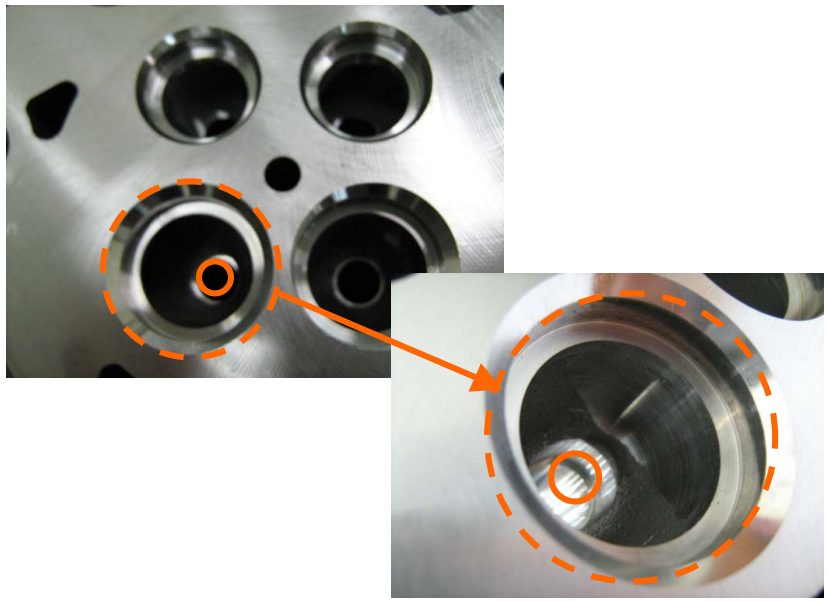			
Type of Part	Cylinder Head	Feed Rate (mm/rev)	Guide Hole 0.2 IN / EX 0.037
Work piece Material	AL alloy	Tool life	60,000 hole
Spindle speed	6,800 rpm	Coolant	Wet
Feed speed(m/min)	Guide Hole 1,360 IN / EX 1,000	Etc	
Depth of cut (mm)	0.4	Tool material	PCD

Cylinder Head
_ Inject Hole Reaming

WORK PIECE		TOOL FIGURE	
		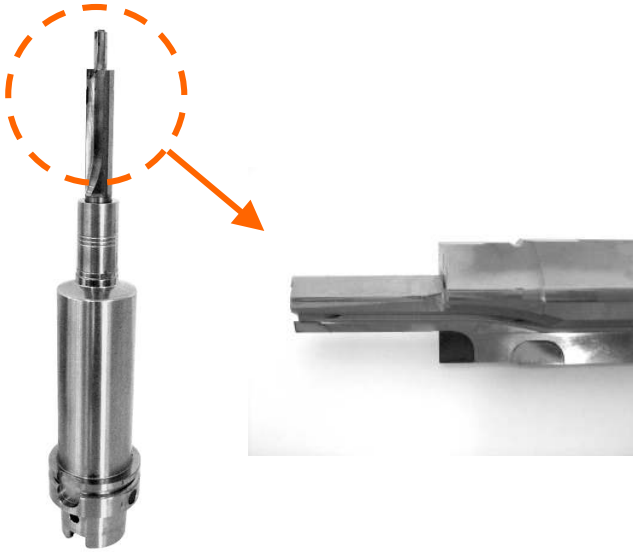	
Type of Part	Cylinder Head	Feed Rate (mm/rev)	0.4
Work piece Material	AL alloy	Tool life	15,000 hole
Spindle speed	3,000 rpm	Coolant	Wet
Cutting speed(m/min)	169.56	Etc	
Depth of cut (mm)	0.4	Tool material	PCD

Cylinder Head
_ Spark Plug Hole Reaming

WORK PIECE		TOOL FIGURE	
		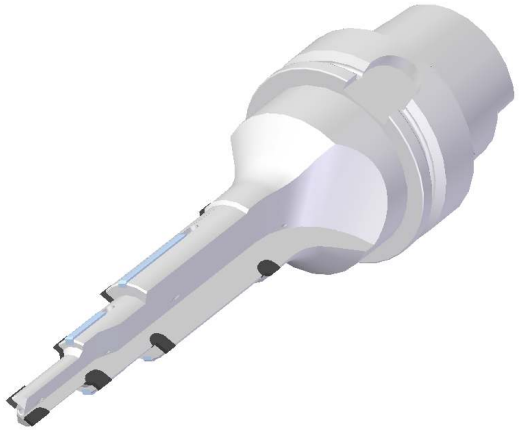	
Type of Part	Cylinder Head	Feed Rate (mm/rev)	0.4
Work piece Material	AL alloy	Tool life	200,000 hole
Spindle speed	6,200 rpm	Coolant	Wet
Cutting speed(m/min)	249	Etc	10.8/18.5/26D-180L-HSKA63
Depth of cut (mm)	0.3	Tool material	PCD

Cylinder Head
_ Valve Seat Intake

WORK PIECE		TOOL FIGURE	
		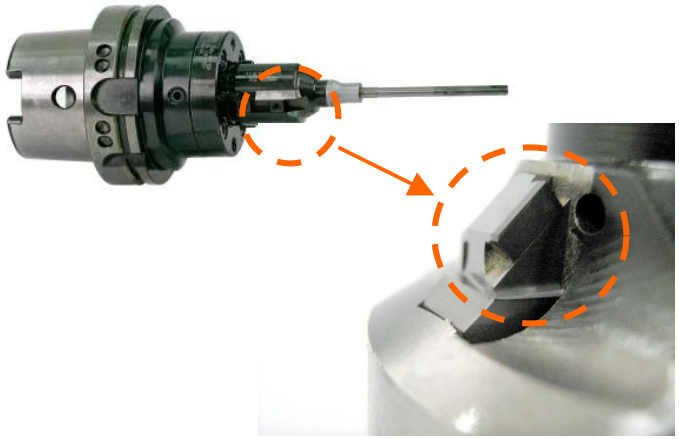	
Type of Part	Cylinder Head	Feed Rate (mm/rev)	0.07
Work piece Material	Sintered Metal	Tool life	900 ea (7,200 hole)
Spindle speed	1,000 rpm	Coolant	Wet
Feed speed(m/min)	84.78	Etc	
Depth of cut (mm)	0.2	Tool material	PCBN

Cylinder Head
_ Valve guide Reaming

WORK PIECE		TOOL FIGURE	
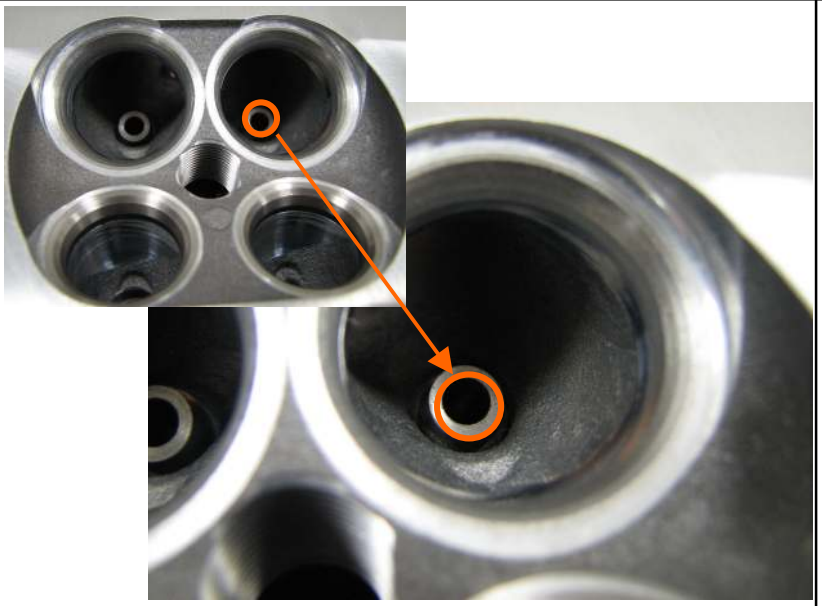		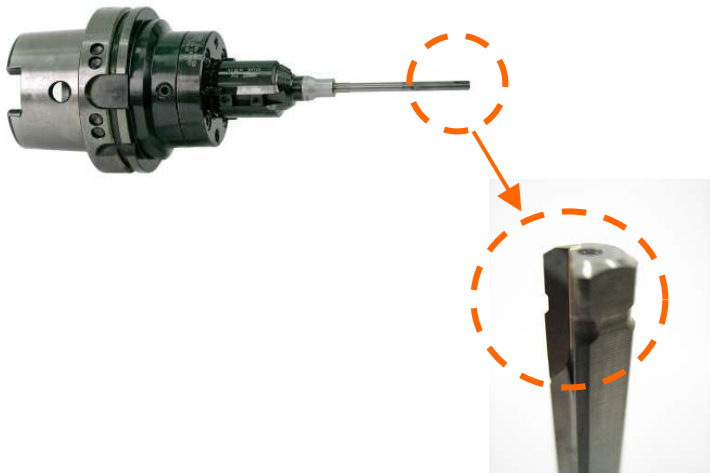	
Type of Part	Cylinder Head	Feed Rate (mm/rev)	0.1
Work piece Material	Sintered Metal	Tool life	900 unit (7,200 hole)
Spindle speed	3,000 rpm	Coolant	Wet
Cutting speed(m/min)	56.52	Etc	
Depth of cut (mm)	0.4	Tool material	PCD

Cylinder Head

_ Valve Seat Exhaust

WORK PIECE		TOOL FIGURE	
		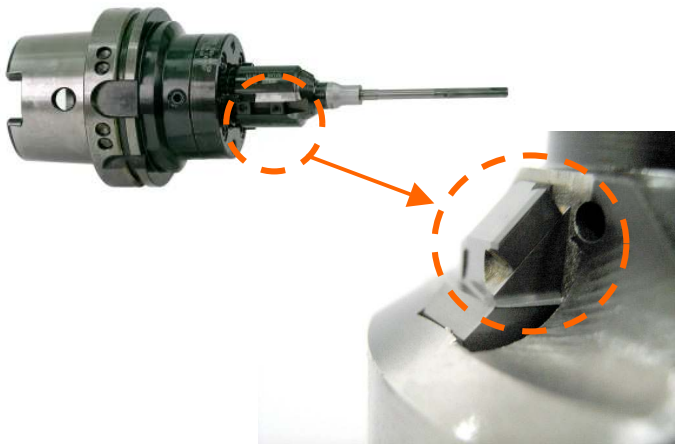	
Type of Part	Cylinder Head	Feed Rate (mm/rev)	0.07
Work piece Material	Sintered Metal	Tool life	900 unit (7,200 hole)
Spindle speed	1,000 rpm	Coolant	Wet
Feed speed(m/min)	71.278	Etc	
Depth of cut (mm)	0.2	Tool material	PCBN

Cylinder Head
_ Valve Seat Rough(Head fitting)

WORK PIECE		TOOL FIGURE	
Type of Part	Cylinder Head	Feed Rate (mm/rev)	0.07
Work piece Material	Sintered Metal	Tool life	900 unit (7,200 hole)
Spindle speed	1,000 rpm	Coolant	Wet
Feed speed(m/min)	71.278	Etc	Shorter setting time, More rigid & longer tool life
Depth of cut (mm)	0.2	Tool material	PCBN

Cylinder Head
_ Oil Seal Bore Spot Facing

WORK PIECE		TOOL FIGURE	
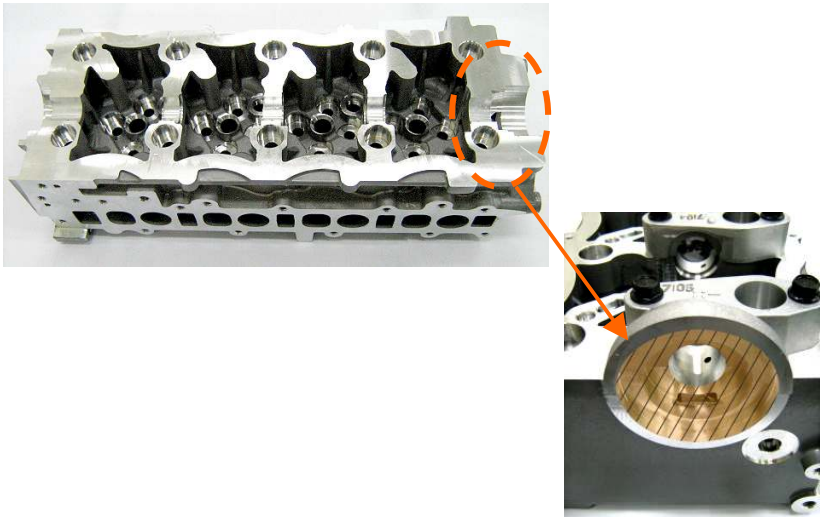			
Type of Part	Cylinder Head	Feed Rate (mm/rev)	0.1
Work piece Material	AL alloy	Tool life	16,000 unit
Spindle speed	1,800 rpm	Coolant	Wet
Cutting speed(m/min)	274.122	Etc	TPGX160304, TPGX090204
Depth of cut (mm)		Tool material	PCD

Cylinder Head
_Cam Bore Finish Boring

WORK PIECE		TOOL FIGURE	
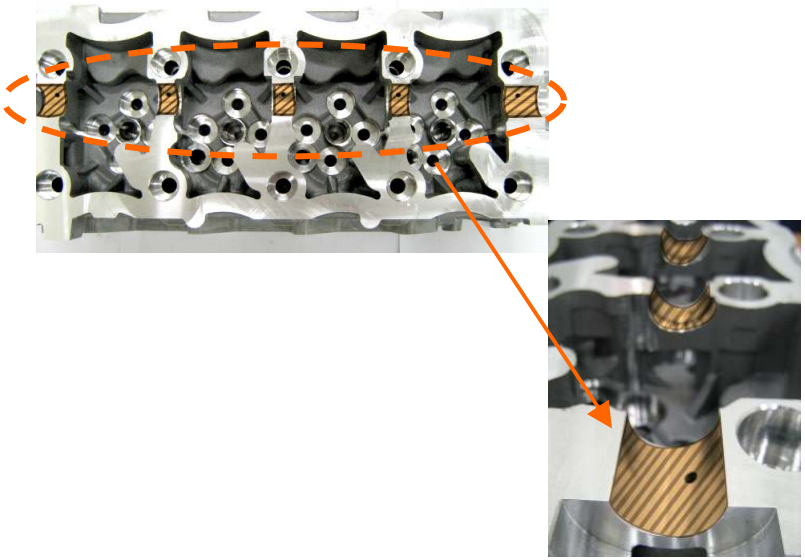		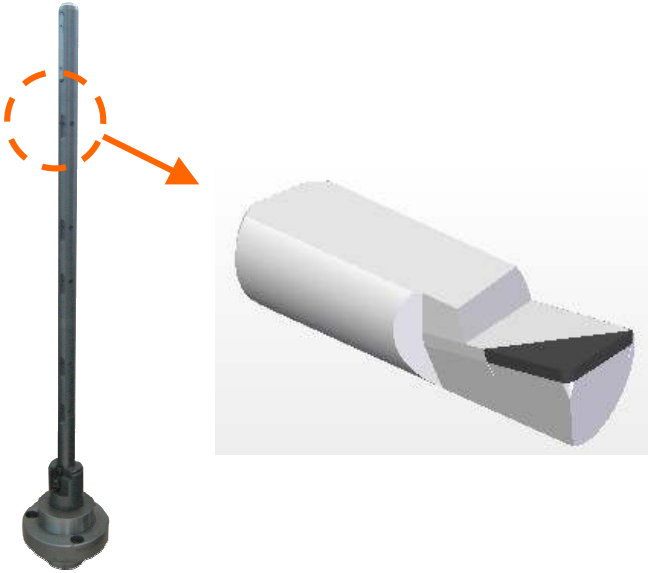	
Type of Part	Cylinder Head	Feed Rate (mm/rev)	0.055
Work piece Material	AL alloy	Tool life	10,000 unit
Spindle speed	3,000 rpm	Coolant	Wet
Cutting speed(m/min)	536.94	Etc	
Depth of cut (mm)	0.5	Tool material	PCD

Automotive
- Cylinder Block

Cylinder Block
_ Top Face Milling

WORK PIECE		TOOL FIGURE	
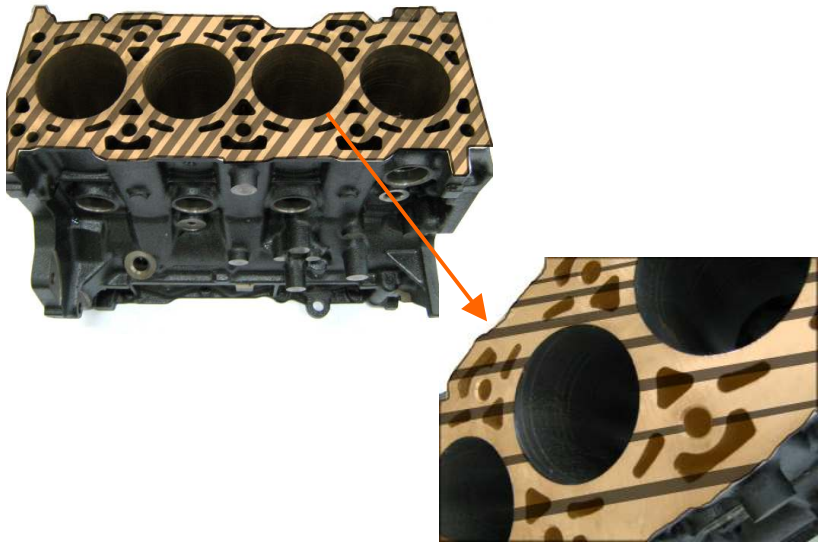			
Type of Part	Engine Block	Feed Rate (mm/rev)	2.4
Work piece Material	FC25	Tool life	300 unit
Spindle speed	900 rpm	Coolant	Dry
Cutting speed(m/min)	707	Etc	HRB179-240 SNGN150620 WIPER
Depth of cut (mm)	0.5	Tool material	PCBN

Cylinder Block
_ Front Face Milling

WORK PIECE		TOOL FIGURE	
Type of Part	Engine Block	Feed Rate (mm/rev)	7.3
Work piece Material	FC25	Tool life	300 unit
Spindle speed	100 rpm	Coolant	Dry
Cutting speed(m/min)	126	Etc	HRB179-240 SNGN150620 WIPER
Depth of cut (mm)	0.5	Tool material	PCBN

Cylinder Block
_ Rear Face Milling

WORK PIECE		TOOL FIGURE	
Type of Part	Engine Block	Feed Rate (mm/rev)	3.25
Work piece Material	FC25	Tool life	300 unit
Spindle speed	400 rpm	Coolant	Dry
Cutting speed(m/min)	201	Etc	HRB179-240 SNGN150620 WIPER
Depth of cut (mm)	0.5	Tool material	PCBN

Cylinder Block
_ Bore Boring

WORK PIECE		TOOL FIGURE	
Type of Part	Engine Block	Feed Rate (mm/rev)	0.6
Work piece Material	FC25	Tool life	900 unit (3,600 hole)
Spindle speed	1,900 rpm	Coolant	Dry
Cutting speed(m/min)	493	Etc	HRB179-240 SNGN090308
Depth of cut (mm)		Tool material	Solid PCBN

Automotive
- Transmission

T/M
_ Case Milling

WORK PIECE		TOOL FIGURE	
Type of Part	T/M Case	Feed Rate (mm/rev)	0.12
Work piece Material	AL alloy	Tool life	8,000 unit
Spindle speed	4,500 rpm	Coolant	Wet
Cutting speed(m/min)		Etc	
Depth of cut (mm)	0.5	Tool material	PCD

T/M
_ Convert Case Milling

WORK PIECE		TOOL FIGURE	
Type of Part	T/M Convert Case	Feed Rate (mm/rev)	1.4
Work piece Material	AL alloy (ADC10 or ADC12)	Tool life	15,000 Unit
Spindle speed	11,500 rpm	Coolant	Wet
Cutting speed(m/min)	2,276	Etc	
Depth of cut (mm)	1~3	Tool material	PCD

T/M
_ Valve body Milling

WORK PIECE		TOOL FIGURE	
Type of Part	Valve Body	Feed Rate (mm/rev)	0.12
Work piece Material	AL alloy	Tool life	8,000 ea
Spindle speed	4,500 rpm	Coolant	Wet
Cutting speed(m/min)		Etc	
Depth of cut (mm)	0.5	Tool material	PCD

T/M
_ Valve body Reaming

WORK PIECE		TOOL FIGURE	
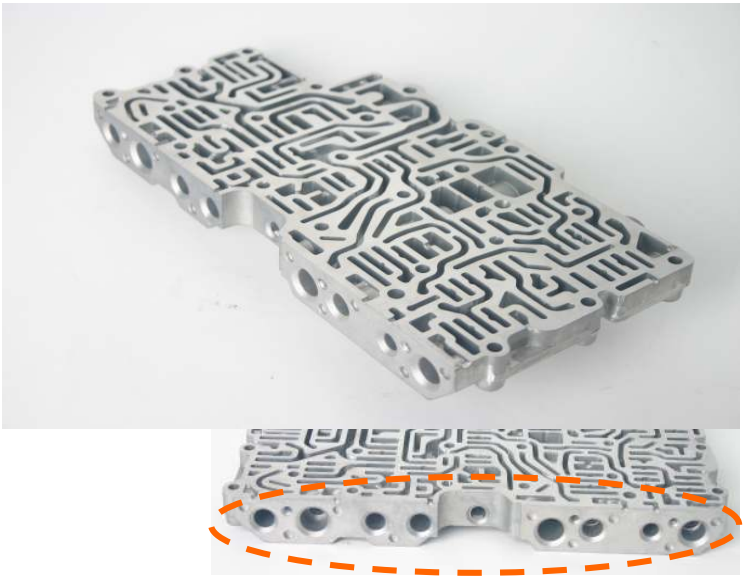			
Type of Part	Valve Body	Feed Rate (mm/rev)	0.16
Work piece Material	AL alloy	Tool life	20,000 hole
Spindle speed	6,000 rpm	Coolant	Wet
Cutting speed(m/min)	235.6	Etc	10.8/12.6/14.1/15.5/17.5D-155L
Depth of cut (mm)	0.2~0.3	Tool material	PCD

T/M
_ Case Snap Ring

WORK PIECE		TOOL FIGURE	
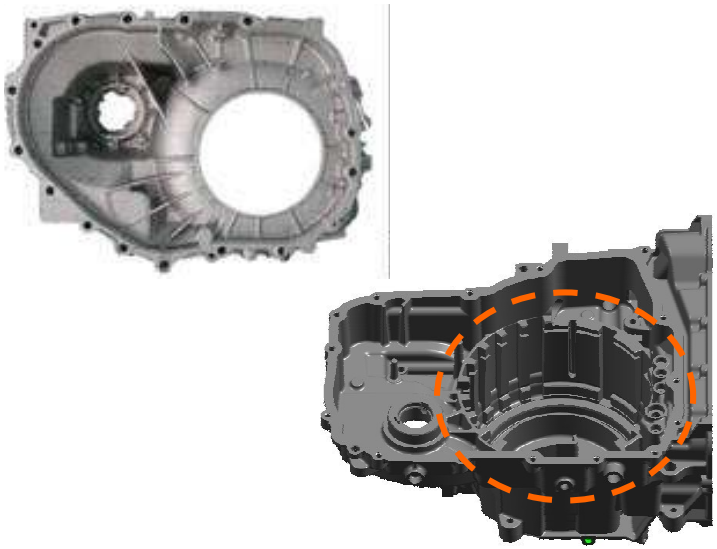			
Type of Part	T/M Case	Feed Rate (mm/rev)	1.5
Work piece Material	AL alloy	Tool life	1,800 unit
Spindle speed	4,000 pm	Coolant	Wet
Cutting speed(m/min)	1,005	Etc	79.5D-67.92L-8Z-HSKA63
Depth of cut (mm)		Tool material	PCD

T/M
_ Case Slot Dip Stick Hole

WORK PIECE		TOOL FIGURE	
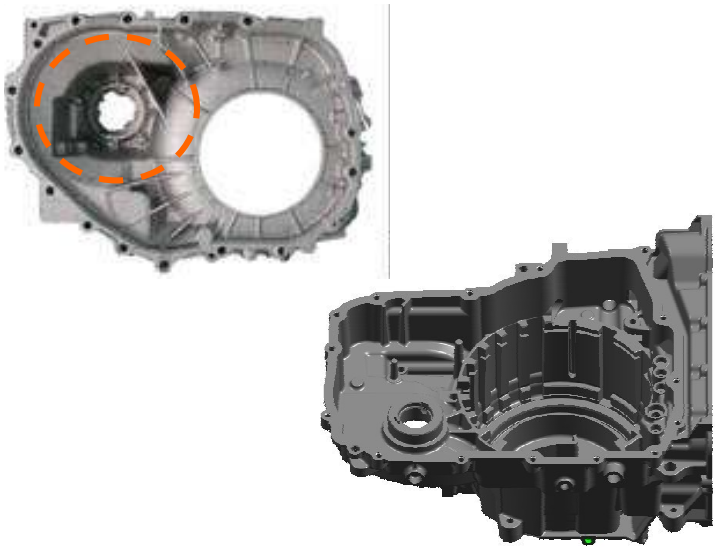			
Type of Part	T/M Case	Feed Rate (mm/rev)	0.6
Work piece Material	AL alloy	Tool life	81,300 unit
Spindle speed	2,000 pm	Coolant	Wet
Cutting speed(m/min)	471	Etc	75D-100L-12Z-HSKA63
Depth of cut (mm)		Tool material	PCD

T/M
_ AUTO Clutch Burnishing

WORK PIECE		TOOL FIGURE	
		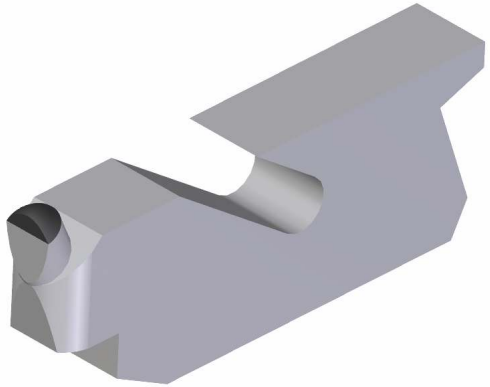	
Type of Part	Auto T/M Clutch	Feed Rate (mm/rev)	0.06
Work piece Material	Hardened steel	Tool life	5,000~7,000 ea
Spindle speed	629 rpm	Coolant	Wet
Cutting speed(m/min)	250	Etc	
Depth of cut (mm)	–	Tool material	Natural Diamond

T/M

_ Stator Face & Plunge Inner diameter

WORK PIECE		TOOL FIGURE	
		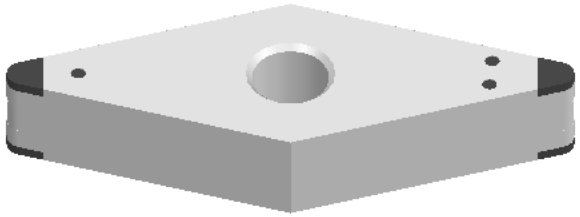	
Type of Part	Stator	Feed Rate (mm/rev)	0.12
Work piece Material	Hardened steel (HRC 65-68) Continuous Cutting	Tool life	730 ea / edge
Spindle speed	175 rpm	Coolant	Wet
Cutting speed(m/min)	26 ~ 35	Etc	4MT-VNGA332
Depth of cut (mm)	0.1	Tool material	PCBN

T/M
_ Stator Out diameter

WORK PIECE		TOOL FIGURE	
		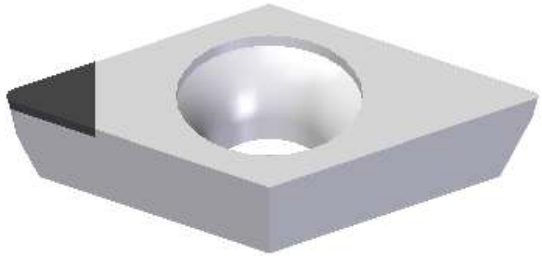	
Type of Part	Stator	Feed Rate (mm/rev)	0.02
Work piece Material	AL alloy	Tool life	9,600 ea
Spindle speed	1,800 rpm	Coolant	Wet
Cutting speed(m/min)	934	Etc	DPGW32.51F
Depth of cut (mm)	0.50 ~ 0.76	Tool material	PCD

T/M
_ Gear

WORK PIECE		TOOL FIGURE	
		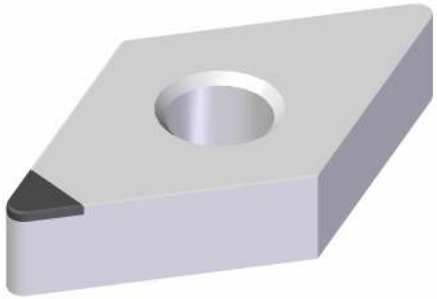	
Type of Part	Gear	Feed Rate (mm/rev)	0.12
Work piece Material	SCR420H Interrupted Cutting	Tool life	150 ea
Spindle speed	320 rpm	Coolant	Dry
Cutting speed(m/min)	150	Etc	DNMA150404
Depth of cut (mm)	0.07	Tool material	PCBN

T/M
_ Gear

WORK PIECE		TOOL FIGURE	
		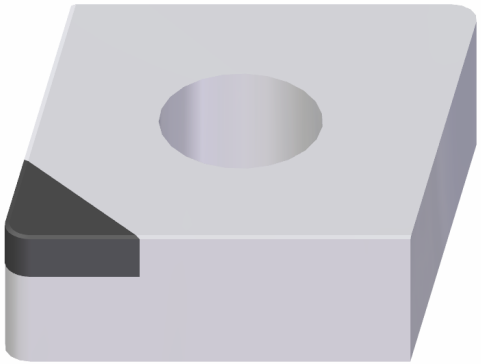	
Type of Part	Gear	Feed Rate (mm/rev)	0.15~0.25
Work piece Material	SCR420H Interrupted Cutting	Tool life	250 ea
Spindle speed		Coolant	Dry
Cutting speed(m/min)	150~300	Etc	CNMA120408
Depth of cut (mm)	0.08	Tool material	PCBN

T/M
_ Main Shaft

WORK PIECE		TOOL FIGURE	
		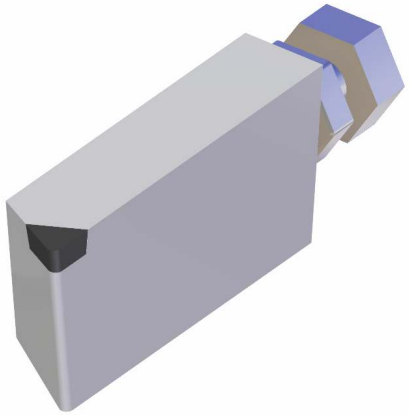	
Type of Part	T/M Main Shaft	Feed Rate (mm/rev)	0.05
Work piece Material	SCM415 HRC 58	Tool life	1,000 ea
Spindle speed	950 rpm	Coolant	Dry
Cutting speed(m/min)		Etc	
Depth of cut (mm)	0.3	Tool material	PCBN

AUTO T/M
_Input Shaft

WORK PIECE		TOOL FIGURE	
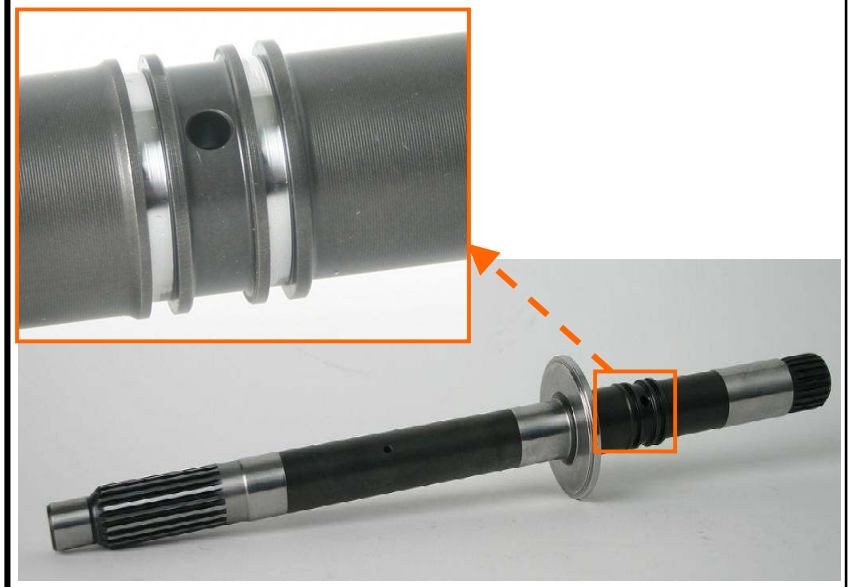		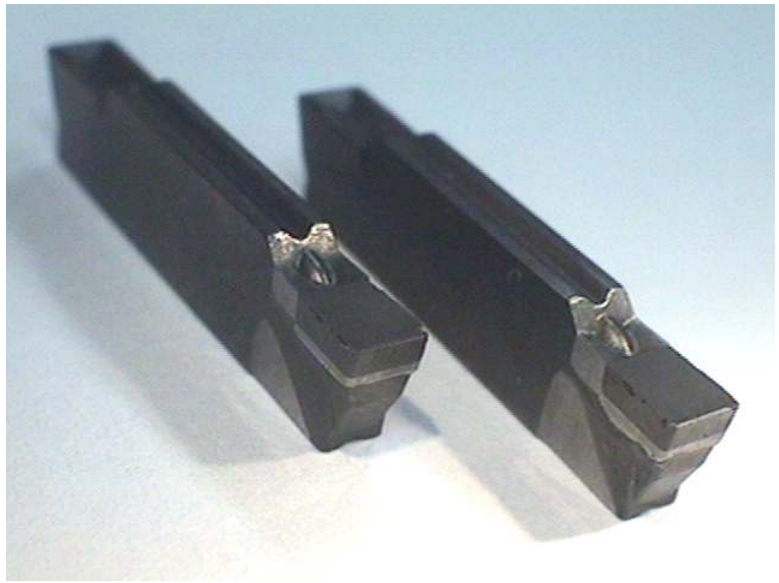	
Type of Part	Auto T/M Input Shaft	Feed Rate (mm/rev)	0.07
Work piece Material	SAE 5135	Tool life	700 ~ 1,200 ea
Spindle speed	1,250 rpm	Coolant	Wet
Cutting speed(m/min)	90	Etc	
Depth of cut (mm)		Tool material	PCBN

T/M
_ Carrier Reaming

WORK PIECE		TOOL FIGURE	
		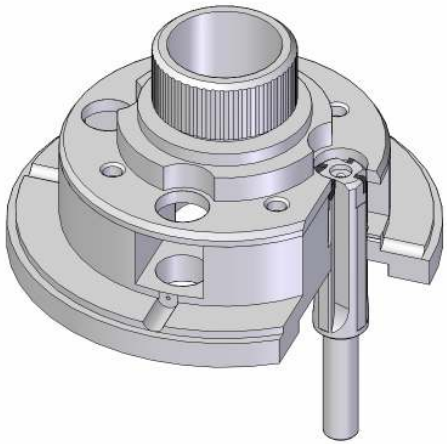	
Type of Part	Front, Mid & Rear carrier	Feed Rate (mm/rev)	0.15
Work piece Material	S25C, SCR420HB	Tool life	200~ 250 unit
Spindle speed	1,900 rpm	Coolant	Wet
Cutting speed(m/min)	115	Etc	19D-110L-12Y etc.
Depth of cut (mm)	0.15 mm	Tool material	CERMET

T/M
_ Annulus Gear (Rough)

WORK PIECE	TOOL FIGURE
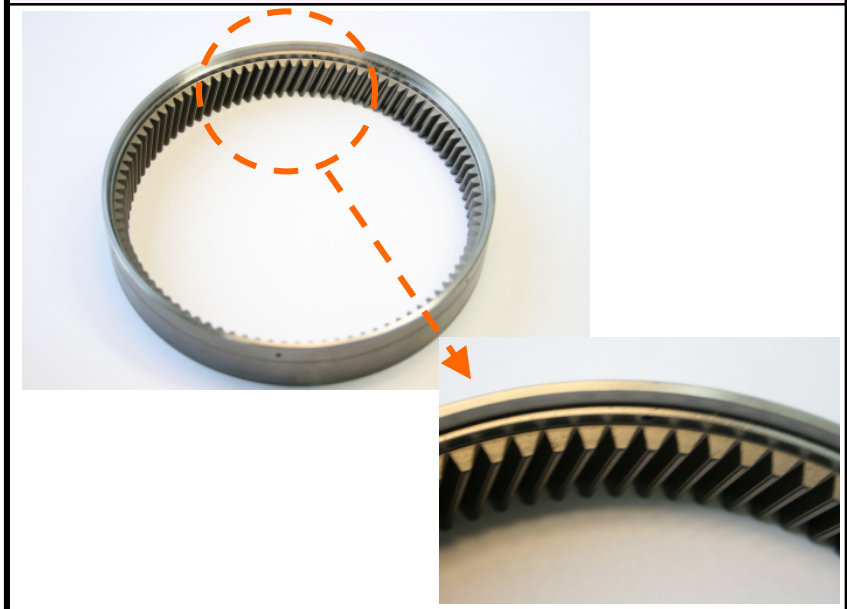	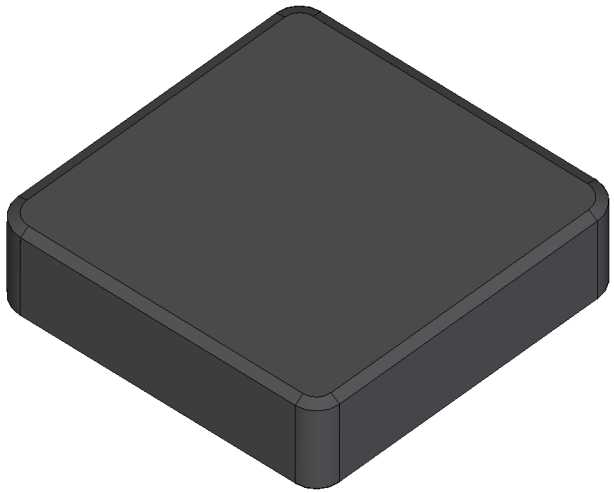

Type of Part	Annulus gear	Feed Rate (mm/rev)	0.2 ~ 0.4
Work piece Material	Scr420hb	Tool life	400~450 unit
Spindle speed	2,000 ~3,000 rpm	Coolant	Wet
Cutting speed(m/min)	150	Etc	CNMN090308, CNMN090312
Depth of cut (mm)	0.2	Tool material	Solid PCBN

T/M
_ Annulus Gear (Finish)

WORK PIECE	TOOL FIGURE
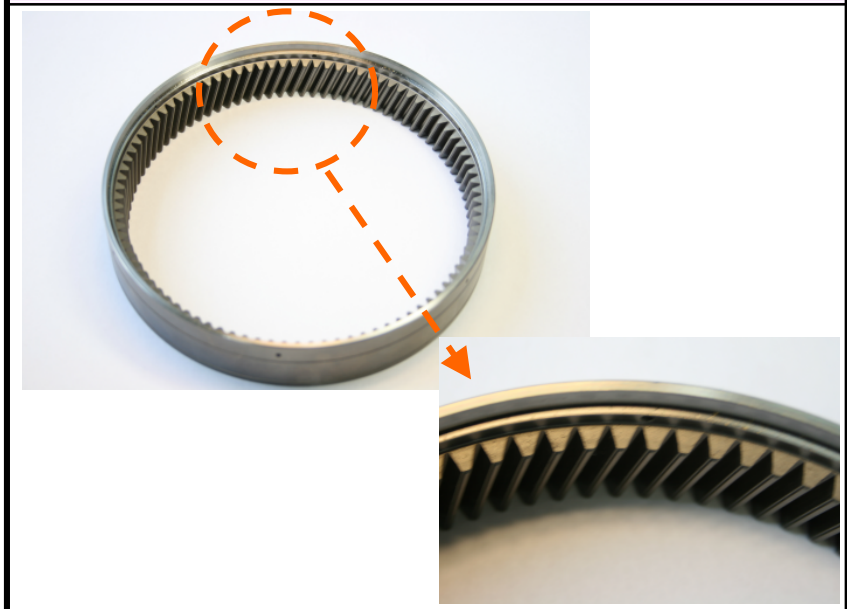	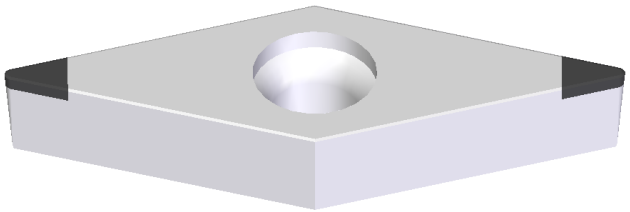

Type of Part	Annulus gear	Feed Rate (mm/rev)	0.2 ~ 0.4
Work piece Material	Scr420hb	Tool life	400~450 unit
Spindle speed	2,000 ~3,000 rpm	Coolant	Wet
Cutting speed(m/min)	150	Etc	VBGW160402 VBGW160404
Depth of cut (mm)	0.1	Tool material	PCBN

T/M
_ Hub bearing

WORK PIECE		TOOL FIGURE	
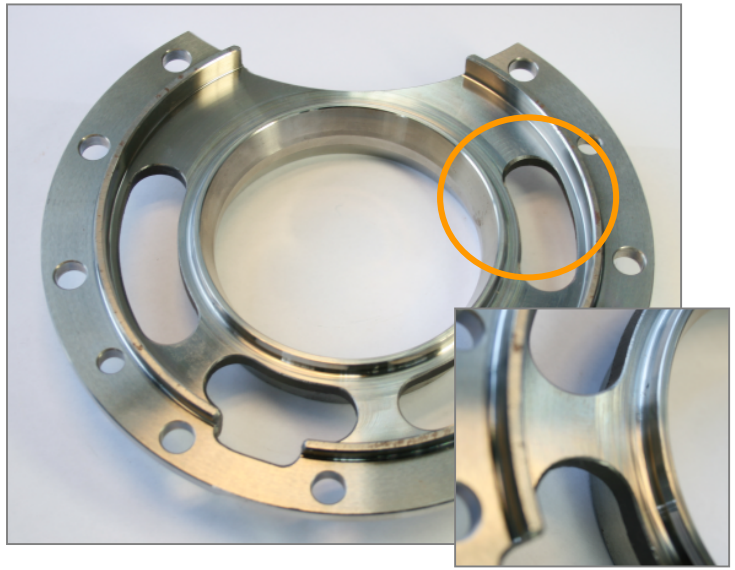		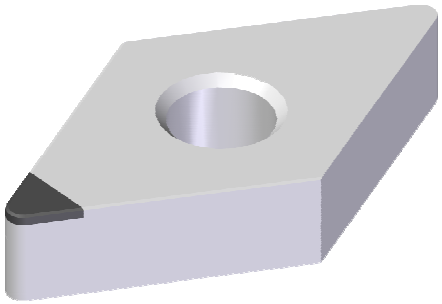	
Type of Part	T/M HUB BEARING	Feed Rate (mm/rev)	0.05~0.1
Work piece Material	STB2	Tool life	250/corner
Spindle speed	600	Coolant	wet
Cutting speed(m/min)	220	Etc	DNGA150612
Depth of cut (mm)	0.5	Tool material	PCBN

Automotive
- Other parts

Manifold Milling

WORK PIECE		TOOL FIGURE	
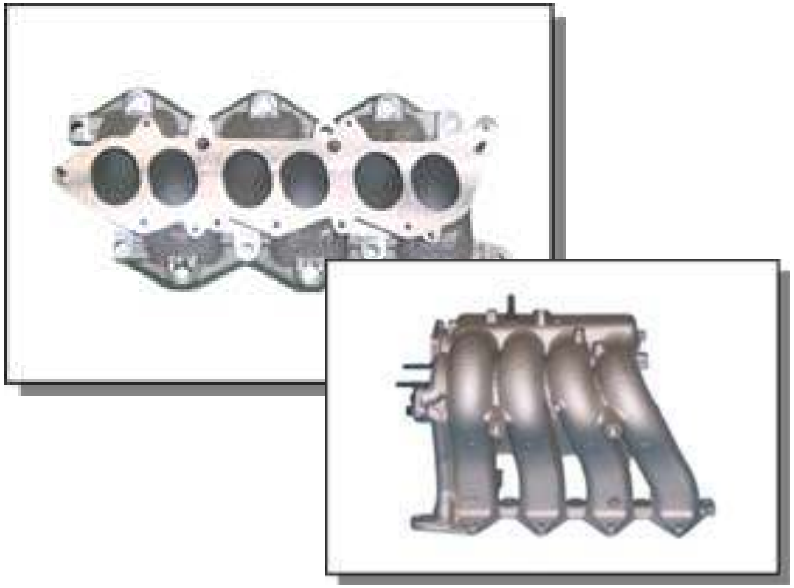		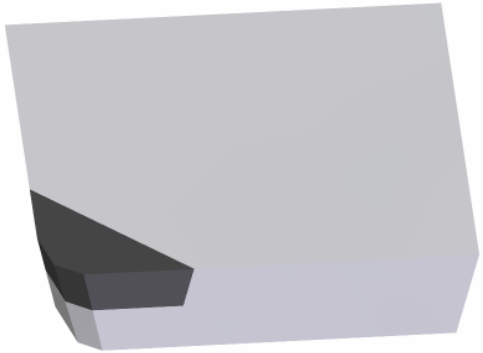	
Type of Part	Intake Manifold	Feed Rate (mm/rev)	
Work piece Material	AL alloy	Tool life	25,000 ea
Spindle speed	8,000 rpm	Coolant	Wet
Cutting speed(m/min)		Etc	SECN42R
Depth of cut (mm)	0.8	Tool material	PCD

Brake Disc
_ Rough

WORK PIECE		TOOL FIGURE	
Type of Part	Brake Disc	Feed Rate (mm/rev)	0.35
Work piece Material	FC25	Tool life	680 ea / corner
Spindle speed		Coolant	Dry
Cutting speed(m/min)	1200	Etc	Rough
Depth of cut (mm)	3~4	Tool material	Coated Solid PCBN

Brake Disc
_ Finish

WORK PIECE		TOOL FIGURE	
		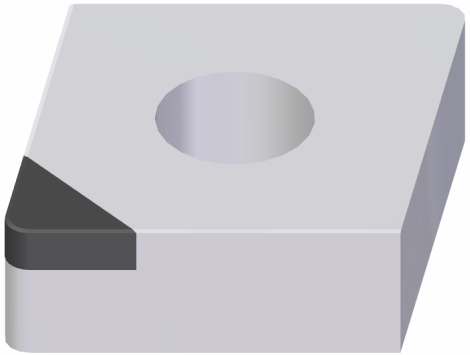	
Type of Part	Brake Disc	Feed Rate (mm/rev)	0.1
Work piece Material	FC220	Tool life	200 ea / corner
Spindle speed		Coolant	Wet
Cutting speed(m/min)	500	Etc	Finish
Depth of cut (mm)	0.4	Tool material	PCBN

Con Rod Bore Boring

WORK PIECE		TOOL FIGURE	
Type of Part	Copper Core Bushing Of Con Rod	Feed Rate (mm/rev)	0.11
Work piece Material	Copper alloy	Tool life	8,000 ea / corner
Spindle speed		Coolant	Wet
Cutting speed(m/min)	80	Etc	
Depth of cut (mm)	0.5	Tool material	PCD

Piston
_ Grooving

WORK PIECE		TOOL FIGURE	
		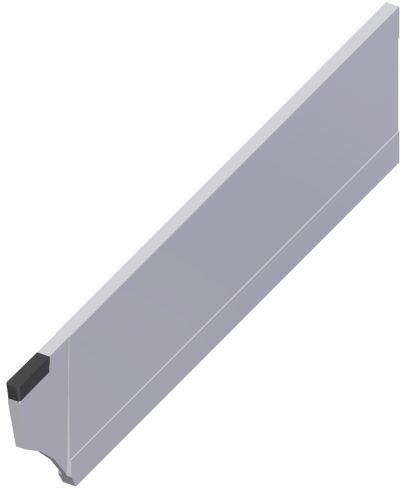	
Type of Part	Pistion	Feed Rate (mm/rev)	0.3
Work piece Material	High-Cu AL alloy	Tool life	20,000
Spindle speed		Coolant	Wet
Cutting speed(m/min)	300	Etc	
Depth of cut (mm)	0.15	Tool material	PCD

Piston
_ Grooving

WORK PIECE		TOOL FIGURE	
		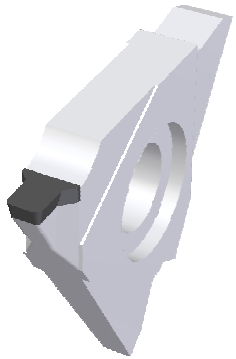	
Type of Part	Piston	Feed Rate (mm/rev)	0.3
Work piece Material	AL alloy	Tool life	20,000
Spindle speed		Coolant	Wet
Cutting speed(m/min)	300	Etc	
Depth of cut (mm)	0.15	Tool material	PCD

Piston
_ Finish Turning

WORK PIECE		TOOL FIGURE	
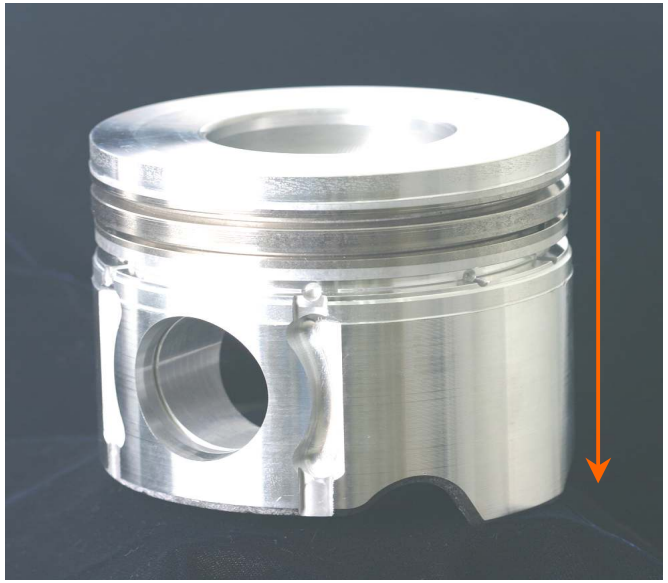		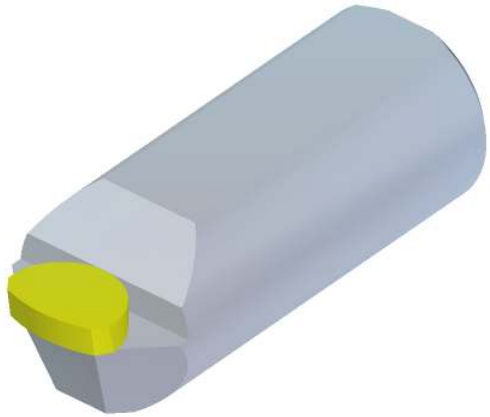	
Type of Part	Piston	Feed Rate (mm/rev)	
Work piece Material	AL alloy	Tool life	
Spindle speed		Coolant	Wet
Cutting speed(m/min)		Etc	
Depth of cut (mm)	0.05~0.07	Tool material	Natural Diamond Mono Crystal Diamond

AL Wheel
_ Mirror Finish Turning

WORK PIECE		TOOL FIGURE	
Type of Part	AL Wheel	Feed Rate (mm/rev)	0.1
Work piece Material	AL alloy	Tool life	
Spindle speed	1,500 rpm	Coolant	Wet
Cutting speed(m/min)		Etc	VCGT160420
Depth of cut (mm)	0.05	Tool material	Mono Crystal Diamond

Pinion Housing Reaming

WORK PIECE		TOOL FIGURE	
Type of Part	Pinion Housing	Feed Rate (mm/rev)	
Work piece Material	AL alloy	Tool life	20,000 ea
Spindle speed	3000 rpm	Coolant	
Cutting speed(m/min)		Etc	
Depth of cut (mm)	0.2	Tool material	PCD

Pinion Housing Reaming

WORK PIECE		TOOL FIGURE	
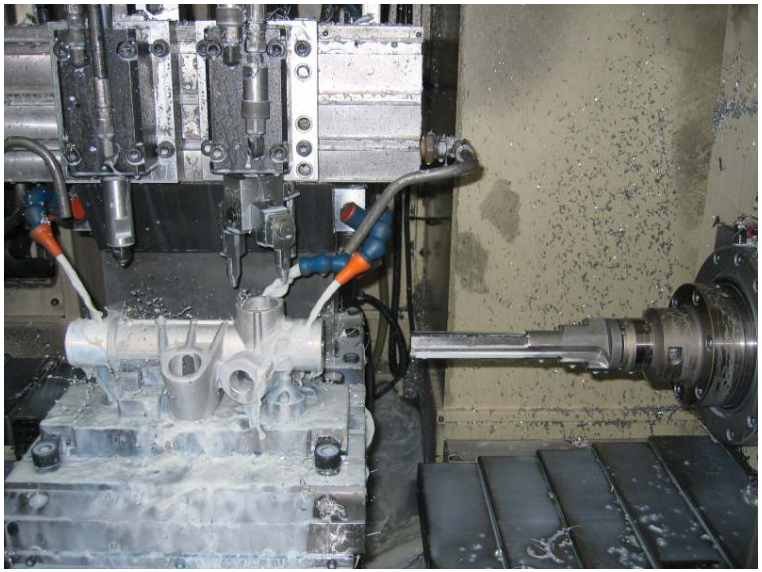			
Type of Part	Pinion Housing	Feed Rate (mm/rev)	
Work piece Material	AL alloy	Tool life	15,000 ea
Spindle speed	3,000 rpm	Coolant	
Cutting speed(m/min)		Etc	
Depth of cut (mm)	0.2	Tool material	PCD

Commutator

WORK PIECE		TOOL FIGURE	
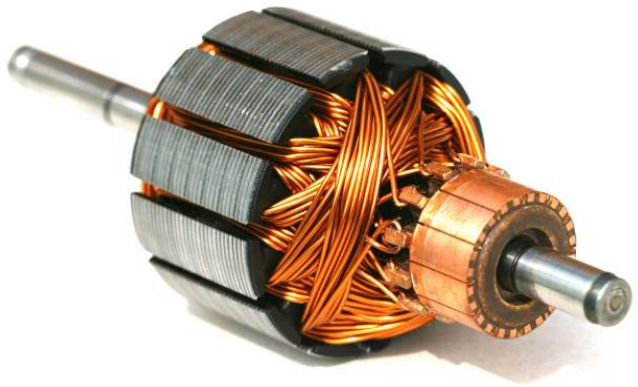		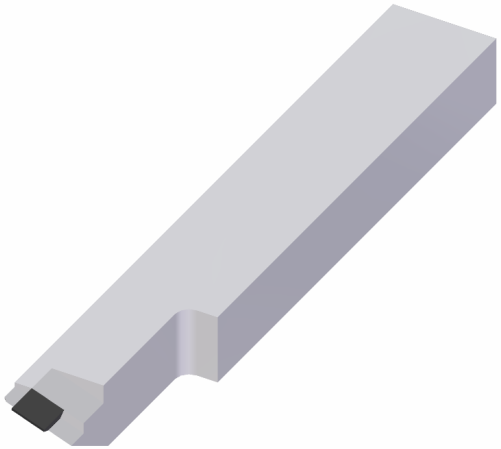	
Type of Part	Commutator	Feed Rate (mm/rev)	0.03
Work piece Material	Cu	Tool life	20,000
Spindle speed	5,000 rpm	Coolant	
Cutting speed(m/min)	250	Etc	
Depth of cut (mm)	0.15mm	Tool material	PCD

Commutator

WORK PIECE		TOOL FIGURE	
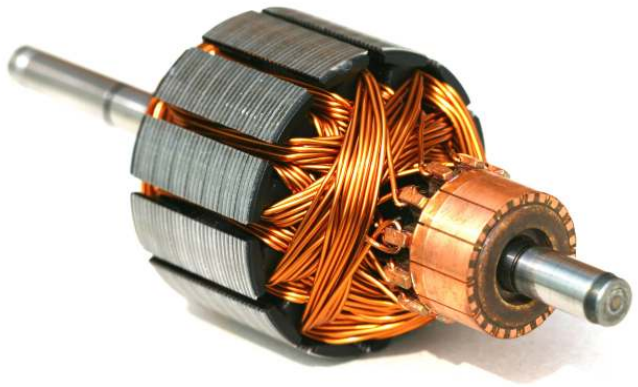		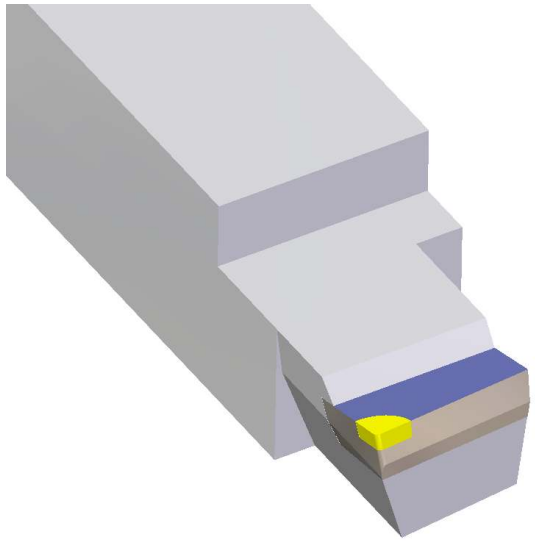	
Type of Part	Commutator	Feed Rate (mm/rev)	0.03
Work piece Material	Cu	Tool life	
Spindle speed	5,000 rpm	Coolant	
Cutting speed(m/min)	250	Etc	
Depth of cut (mm)	0.05	Tool material	Natural Diamond

Cam Shaft Live-center

WORK PIECE	TOOL DRAWING
	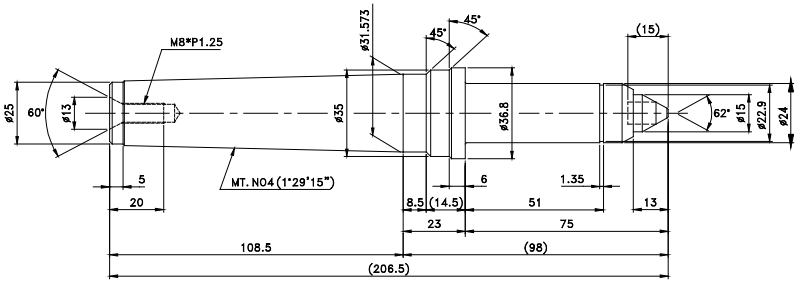

Type of Part	Cam Shaft	Feed Rate (mm/rev)	
Work piece Material		Tool life	
Spindle speed		Coolant	
Cutting speed(m/min)		Etc	
Depth of cut (mm)		Tool material	PCD

Scriber for Safety Glass

WORK PIECE		TOOL DRAWING	
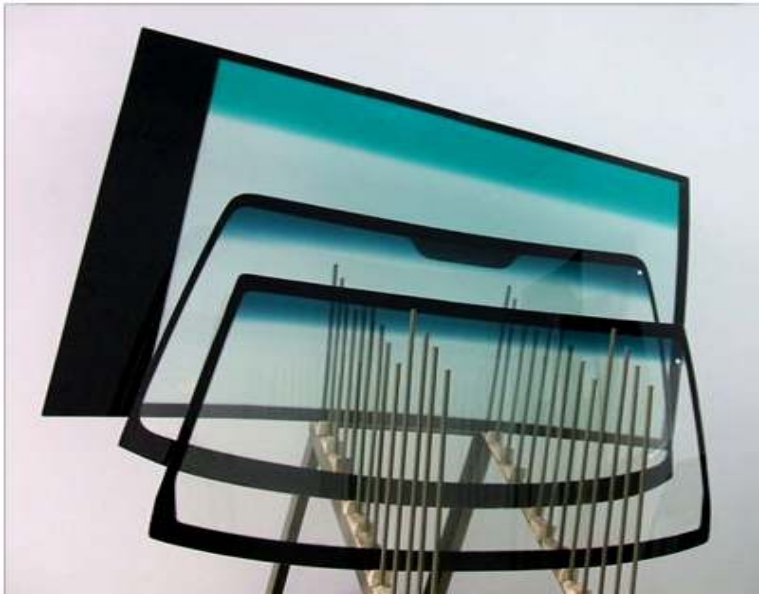		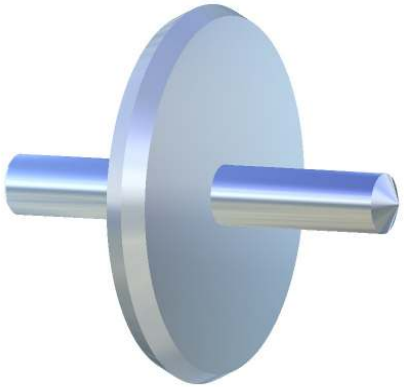	
Type of Part	Scriber	Feed Rate (mm/rev)	
Work piece Material	Glass	Tool life	100,000 ~ 300,000 pcs
Pressure	30~40 N	Coolant	Oil
Cutting speed(m/min)	10~40 m/min	Etc	
Depth of cut (mm)		Tool material	PCD

Servo Pump
_ Case Reaming

WORK PIECE		TOOL FIGURE	
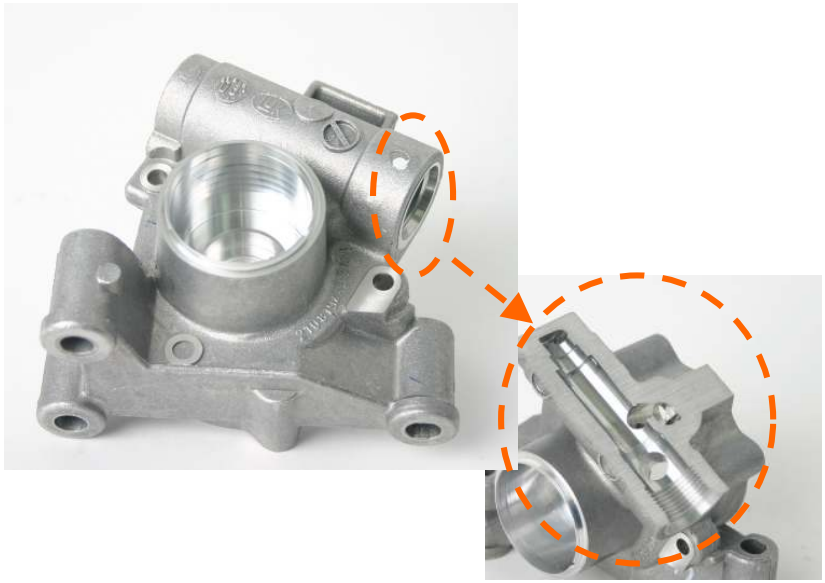			
Type of Part	Servo Pump Case	Feed Rate (mm/rev)	0.1
Work piece Material	AL alloy (Al, Si 9%, Cu 3%)	Tool life	20,000 ~ 50,000 ea
Spindle speed	4,000 rpm	Coolant	Wet (Soluble oil 12%)
Cutting speed(m/min)		Etc	(10.5/13/17/20/30)D-130L
Depth of cut (mm)		Tool material	PCD

Wheel bearing
_ turning

WORK PIECE		TOOL FIGURE	
		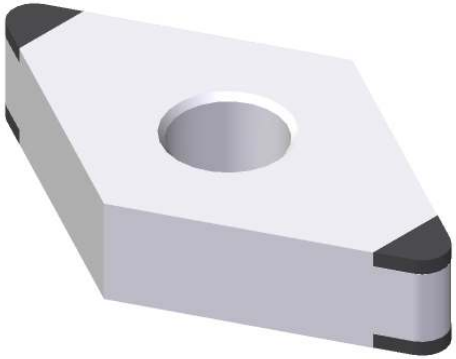	
Type of Part	Wheel bearing(ball type)	Feed Rate (mm/rev)	0.13
Work piece Material	Bearing steel	Tool life	800~1,000/corner
Spindle speed	1400	Coolant	Wet
Cutting speed(m/min)	250	Etc	4C-DNGA150408,12
Depth of cut (mm)	0.05	Tool material	PCBN